The "Rogue Eagle" is a publication of the Rogue Eagles R/C Club, Medford Oregon - AMA 534

Rogue Eagle

www.rogue-eagles.org

November 2011

In this issue:

- Club News
- Tips and Tricks
- B-24
- Mild to Wild News
- Tips & Tricks
- Arming Switches for Electrics
- Dual Rates versus Expo
- And more!

Happy Thanksgiving!

General Meeting Minutes
November 8th. 2011

Opening:
The meeting was formally opened for business at 7.03 p.m. at the Central Point Senior Center by the President, Jim Fowler. There were twenty-three members present.

Meeting Minutes:
The minutes of the October 11th. General Meeting were read out by the Secretary.
Richard Schwegerl brought up the subject of the new event schedule for next year, in particular the VRCS event. He wants to bring forward a proposal for a change at the next meeting.
A motion was moved seconded and approved to accept the minutes as read.

Treasurers Report.
Werner stated that the Share account stands at $25.77. The Checking Account is $6,686.06 and the Money Maker account stands at $2,346.57, making a grand total of $9,058.40. The dedicated Runway account stands at $8,139.36.
There were no comments or objections, so a motion was moved seconded and approved to accept the Treasurers report as read.

Old Business.

Latrines.
Sam Arrigo reported that he and Gary Croucher had completed the painting of the Latrine floors. The floor of the boat has also been painted. There is also enough paint left to paint the floors at the latrines at Agate Lake.
Jay has completed the painting of the "no-smoking" signs on the latrine doors.

Start-up benches.
Sam reported that he has performed repairs again on the transmitter boxes on the benches. He wants to remind members that it damages the bench if people try to lift and move the bench by holding the transmitter structure.

Level 1 award.
Rick Lindsey took the floor to present Joseph Jones with his level 1 pin. Joseph is a new member of the club who has recently re-entered the hobby. There was a round of applause for Joseph.

New Business.

Bill Grove.
Wray Freitas stated that he has visited Bill at the VA Hospital in Roseburg. Bill is having new medication and he is looking much better.

Runway Restoration
Bill Inman spoke up and suggested that a percentage be contributed every month to the Runway Fund. Jay Strickland responded that the Board is already addressing this with a plan to do just that, but details have yet to be determined. There will definitely be more on this topic soon.

Werner asked that anyone who has not acted regarding the returned checks, to please either cash them, or let him know positively if the amounts are to remain as contributions to the runway fund.

IMAC judging.
Paul Chapman spoke about the possibility of bringing an expert from Washington to provide a school for judges for IMAC Contests. Paul stated that this would be good for improving piloting skills. He asked that anyone interested should get in contact with him

Officer positions.
Jim announced that for personal reasons he is unable to continue to remain as President of the Rogue Eagles and so is resigning. Jay Strickland is stepping in to be the new President. This is in accordance with the club Byelaws.

In these circumstances the President appoints the vacated officer positions, therefore Jay has appointed Gary Neal, with his agreement, to be the new Vice President through 2012.

Jay stated that he will process an application to the AMA for the Rogue Eagles to become a Leader Club. He feels that we are more than qualified to attain this status.

Next it was brought up that Alan Littlewood has acted as Secretary Pro Tem through 2011 and would like a volunteer to step forward take over the position. There were no immediate volunteers.

The Web Site.
Rick Lindsey encouraged everyone to have a look at the website. There is a lot of new and good information there.

2011 Xmas party.
Jim reminded the meeting that the party is at J.J. North's in Grants Pass at 6 p.m. on Friday December 2nd. The meal is $12.95 per person, gratuities being extra.

Werner stated that we will be having Gift Certificates as door prizes. The certificates will be in the amounts of $50, $30 and $20. Three for men plus three for the ladies.

Show and Tell.
Sam Arrigo showed the very large plans he has for twin mustangs, P82 and P82E. They were designed by Art Johnson and acquired from Amazon.

Clark Wolfe showed the mini seaplane (name unknown) that he has modified to have three motors and an extra wing.

Richard Schwegerl talked about his recent trip and showed two engines that he is selling. An ASP 91 and an HP 1.20 twin. This comprises two .61's in tandem.

He also showed a red Corsair with a Saito 1.20, 4 stroke, 3-cylinder radial engine.

The meeting adjourned at 7:52 p.m.

Mild to Wild Closing it's Doors!?

If you heard than Mild to Wild was closing it's doors, I've got good news! Mild and Wild owner, Dennis Rogers, has announced that instead of closing the doors, due to the bad economy, he will be making major changes in the product line.

Dennis will be running the store and will be phasing out of the electric car portion of the business and focusing on electric r/c airplanes.

Dennis has been a supporter of the Rogue Eagles and contributed to our club for several years. Please show your support and shop at Mild to Wild for your next RC purchase.

Mild to Wild Hobby House
309 NW E Street
Grants Pass, OR 97526
Website at: www.mildtowildhh.com

Phone: 541-471-8780

What is Cliff Sands up to?

In a recent email Cliff sent me….

"Cliffs new toy a 25 to 32 acft , stuffed an ax 55 in it, shud go fast !"

Maybe he's planning on sneaking this into the races next year! Gulp!

COWL AND CANOPY MOUNTING

Referring to the photo below, glue balsa blocks in the proper locations desired for mounting your cowl or canopy. Drill an appropriately sized hole through the cowl and into the balsa block. Drill out the balsa block to accept Nyrod. Press a short length of Nyrod in the hole and wick thin CA around the Nyrod. You now have a very vibration-proof mounting method that will undoubtedly outlast your model. http://www.geistware.com

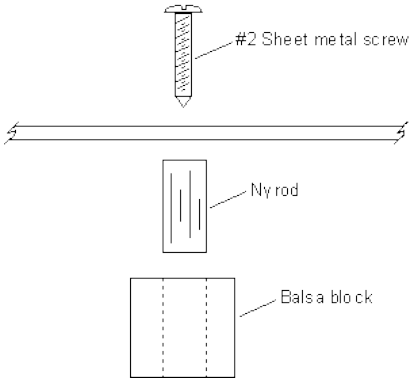

Poke a Hole in Your Covering

Gee why would anyone wan to make a hole in your nice new covering job. Well holes for wing bolts, switches, hatch screw holes, pushrod openings, etc come to mind. Sure you could cut the hole/opening with a Xacto, or razor blade, but then you have to adhere the fresh cut covering to the surrounding wood. The solution; get an old soldering iron tip (pointed preferably) and cut the hole/opening with it. I use a 25 Watt Weller, and it cuts through the covering with ease, and makes a perfect seal. Once you try this you won't want to do it any other way. One word of caution, clean the tip after each cut. I use a wet sponge like that used for soldering, but use a different sponge as to not foul the clean tip used for soldering. If you don't clean the tip regularly the burned covering will cake on, and not only smell really bad, but will inhibit the cut, as you will not have maximum heat. I thoroughly clean the tip with a wire wheel after each use. After it completely cools of course. **(From http://www.geistware.com)**

Arming Switches on Electric Airplanes

This past summer, I learned of a couple of instances where an electric airplane started before the pilot was ready. In one instance, the pilot turned on the transmitter but had it improperly set to another airplane program. Evidently, the programmed airplane had the throttle reversed and when the airplane battery pack was plugged in the motor engaged. Most good ESCs are supposed to prevent this by making you put the throttle to its lowest setting before arming. I'm not sure what happened here.

In the second instance, the airplane was on the bench and the transmitter had yet to be programmed. The throttle stick was in the mid-range. Once again, when the battery was plugged in, the motor engaged.

An arming switch is a good way to prevent any accidental motor start on an electric airplane. They are most feasible on larger motors, but many electric gurus say they can be fitted to an airplane of almost any size.

Another good reason for the arming switch is to be able to plug in the battery and then prepare the airplane for flight. Many times there are cowlings or hatches that have to be secured or other preflight preparations to complete. Why do that with the battery and motor armed?

A number of commercial arming switches are out there. They are not very expensive and are easy to use. Your local hobby shop can surely provide you with one.

If you want to tackle the project in your shop, just peruse the online forums and you will find lots of pictures and schematics.

Here's one in the RCGroups forum: www.rcgroups.com/forums/showthread.php?t=1335070.

And here's an even better idea. These two clubs have posted pertinent information and how-tos on their websites for their members and others to use. I think that is a great idea. It would be a simple matter to create a link on your site to these documents or write one of your own.

Here's a great reference from the East Bay RC Club in Livermore, California: www.eastbayrc.org/TimTips/TimsTips_ArmingSwitch.htm.

And another from the White Hills Eagles club in Shelton, Connecticut: www.whitehillseaglesrc.org/membercontent%5Ctransmittercutoff%5Celectricflightthrottlesafety.pdf

Dual Rate versus Exponential

Dual rate control and expo rate control work differently, yet they do tend to achieve close to the same results. With dual rate control, you have a switch for the function; one switch is usually for rudder or aileron and the other switch is for elevator.

With the switch in the *off* position, you will obtain full control throw on that particular channel. When you turn the dual rate switch to the *on* position, you can reduce the amount of servo control throw or travel to at least 50% of the full control.

Let's say you have a fast, heavily loaded airplane. When it flies at slower speeds for takeoffs and landings, it requires a great deal of control travel. But when it gets up to a fast flying speed, it needs far less control throw. At the faster speeds you want less control to maintain a smooth flight. This is where the dual rate functions come into play.

You make your takeoffs and landings with the dual rate turned off. Then during high-speed flying, you turn on the dual rate switch, which reduces the maximum amount of servo travel (control). The key to this is that you must physically throw that switch while in flight to obtain the reduced control. Keep in mind that while that dual rate switch is on, you can not obtain full control throw. So if you needed more control in a hurry, you must first turn off the dual rate switch.

Exponential rate control (which is referred to as "expo") does not have to be operated by a switch. (It can be, but doesn't have to be!) Nor does it cut back or reduce your maximum servo control throw. Expo rate basically provides for a nonlinear-type control around the neutral transmitter control-stick position. In normal linear control, if you move the transmitter control stick 50% of its normal travel, the servo that it operates moves 50% of its travel. In other words the control response is perfectly linear.

With expo rate, as you begin to move the transmitter control stick, the servo will begin to respond very slowly. By the time you move the control stick 25%, the servo it operates may have only moved 10%. The control response is nonlinear. As you get up to 50%, stick movement, the servo may be up to 40%. When you get to full control-stick movement, you get full servo control.

The degree of nonlinearity can be adjusted. You can set the expo rate for very little nonlinearity, which may be hardly noticeable. Or you can set the expo rate for maximum nonlinearity, which means that when initially moving the control stick, the responding control surface hardly moves at all.

Expo rate control works best on high-speed, highly maneuverable model aircraft. An airplane that appears "jumpy" in high-speed flight will become quite smooth when a good amount of expo rate control is added.

The two best features of expo rate compared to dual rate control are that you get full control throw when you need it and you don't have to remember to keep throwing a switch in flight.

—Bob Aberle, Model Aviation

From the Academy of Model Aeronautics

Turbine Waiver Designation on AMA Membership Cards

We finally did it!

Many members of the turbine community have approached us in the past about combining the turbine waiver and membership card into one. After several reviews, more pondering, and some tweaking, we are happy to announce that starting with the 2012 membership year, turbine waiver designations will now be reflected on AMA's membership cards!

The turbine designations will be identified on the membership cards as follows:

Turbine Fixed
Turbine Rotary
Turbine Control Line
Turbine Homebuilt

Combining the data onto one card is a more convenient approach for all turbine waiver holders. It will also provide club officers and event officials with a much easier way to verify an individual's turbine waiver status.

If you have any questions regarding AMA's turbine program, please contact us at:

turbines@modelaircraft.org.

Locating Engine Mounting Holes

Engine thrust angle can be affected by small errors in the location of the mounting holes. To ensure the mounting holes are properly located on the engine mount, the most important task is marking the holes to match the engine case lugs. One good way to mark these holes is with a machine screw of just the right size to pass through the hole in the mounting lug. Cut the screw so it is just a few thousandths of and inch longer than the thickness of the lug, and, cut it on an angle so there is a sharp edge which extends just through the lug. Now, use two small pieces of double sided tape to hold the engine temporarily in place while you rotate the cutoff screw in each of the four mounting lug holes. This will leave a mark which is the exact diameter of, and in the proper location for, the mounting screws.

The next part is to get a true center mark for this mounting hole. If you have an automatic center punch, you may be aware that some of them come with replaceable tips. Buy an extra tip or two and grind them so they just fit through the mounting lugs and use them to center punch the holes.

Brand Up!

LEADER TO LEADER

Rusty Kennedy, Chairman Leader Member Program Development Committee

We all need to do what we can to encourage new people to learn more about model flying, clubs, and the AMA. Most visitors will seek information by going to the Internet. The Academy of Model Aeronautics and your club logos and website addresses need to be clearly visible at your flying field. This sounds so simple, but few do it well.

The AMA is initiating a branding strategy. Simply put, branding is everything you do to create and deliver value for a customer. One part of branding is the consistent use of the name and logo. Our clubs are part of the AMA branding, too. In fact, clubs and members are the most important part of AMA branding as it is the positive interaction from club members and the flying site that will leave the first impression of value to new people. Just like good service and a meal at restaurant, you will tell six people about it. If you have a bad experience, you'll tell more than 10 people.

Branding your club flying site is important, too. It means letting people know we are the AMA by use of a flag, wind sock, sign, and/or an AMA information sheet. How about a new club sign that reads something like:

Rogue Eagles R/C Club
www.rogue-eagles.org
Academy of Model Aeronautics Charter 524
www.modelaircraft.org

Actual Airline Passenger Briefing:

"In the event of a sudden loss of cabin pressure, oxygen masks will descend from the ceiling. Stop screaming, grab the mask, and pull it over your face. If you have a small child travelling with you, secure your mask before assisting with theirs. If you are travelling with two small children decide now which one you love more."

Part of a flight attendant's arrival announcement:
"We'd like to thank you folks for flying with us today. And, the next time you get the insane urge to go blasting through the skies in a pressurized metal tube, we hope you'll think of U.S. Airways."

Rogue Eagles 2012 Event Calendar

MO	DATE	ACTIVITY	LOCATION	CD
Jan	1	Chili Dog Fun Fly	Agate Field	Larry Myers **(B4 7:30p)** 541-770-3390
	14	Polar Bear Fun Fly	Myrtle Creek Airport	Bruce Harlow 541-863-1920
Mar	9-10-11	Swap Meet	Yamhill County Fairgrounds, McMinn-ville	Larry Miller 503-472-4987
	24	Pylon Race #1	Agate Field	Ben Musolf 541-608-7240
	31	Swap Meet	Josephine County Fairgrounds, Grants Pass	Art Kelly 541-472-9683
Apr	14-15-16	Float Fly	Agate Lake **NOTE! 2.4 ONLY**	Larry Myers **(B4 7:30p)** 541-770-3390
	21	Pylon Race #2	Agate Field	Ben Musolf 541-608-7240
	28-29	IMAC Contest	Agate Field	John Gaines 541-951-1947
May	5	Swap Meet	Agate Field	Joe DeAscentis 541-890-2765
	19-20	Warbirds	Agate Field	John Gaines 541-951-1947
	24 thru 27	IMAA	Castle Air Base	Mike Brown 503-549-3005
	26	Pylon Race #3	Agate Field	Ben Musolf 541-608-7240
	27	Fun Fly & Pot Luck Keno Club Invited	Agate Field	Rick Lindsey 541-776-5832
Jun	1-2-3	Fun fly	Klamath Glen	Sam Ellis 707-954-8284
	8-9-10	La Pine Fun Fly	La Pine	Jim Young 541-536-8523
	15-16-17	Float Fly	Platt I	Dave Olson
	23	Pylon Race #4	Agate Field	Ben Musolf 541-608-7240
	24	Lee Renaud	Agate Field	Jay Strickland 541-855-7161
Jul	7-8	Float Fly	Lake Selmac	Art Kelly 541-472-9683
	7-9	Warbirds over the Pacific	Cottage Grove	Gus Phillips 541 643-9430
	13-14-15	IMAA Fun Fly	Agate Field	Cliff Sands 541-941-0503
	21	Pylon Race #5	Agate Field	Ben Musolf 541-608-7240
Aug	3-4-5	IMAA Fun Fly	Yard Ranch (could change)	Bruce Harlow 541-863-1920
	10-11-12	Dawn Patrol	Yard Ranch (could change)	Bruce Harlow 541-863-1920
	18-19	Air Show	Agate Field	Larry Myers **(B4 7:30p)** 541-770-3390
	25	Pylon Race #6	Agate Field	Ben Musolf 541-608-7240
	24-25-26	Fun Fly	Klamath Glen	Sam Ellis 707-954-8284
Sep	1	VR/CS Fly-In	Agate Field	Richard Schwegerl 541-773-5479
	8	RVF Air Show	Grants Pass	Art Kelly 541-472-9683
	22	Pylon Race #7	Agate Field	Ben Musolf 541-608-7240

Aircraft of the Month: Consolidated B-24 Liberator

The B-24 was employed in operations in every combat theater during World War II. Because of its great range, it was particularly suited for such missions as the famous raid from North Africa against the oil industry at Ploesti, Rumania, on Aug. 1, 1943. This feature also made the airplane suitable for long over-water missions in the Pacific Theater. More than 18,000 Liberators were produced.

The B-24D like this one flew combat missions from North Africa in 1943-1944 with the 512th Bomb Squadron. It is the same type airplane as the "Lady Be Good" -- the world-famous B-24D that disappeared on a mission from North Africa in April 1943 and was found in the Libyan Desert in May 1959.

TECHNICAL NOTES:

Armament: 10 .50-cal. machine guns and 8,000 lbs. of bombs
Engines: Four Pratt & Whitney R-1830s of 1,200 hp each
Maximum speed: 303 mph
Cruising speed: 175 mph
Range: 2,850 miles
Ceiling: 28,000 ft.
Span: 110 ft.
Length: 66 ft. 4 in.
Height: 17 ft. 11 in.
Weight: 56,000 lbs. loaded
Cost: $336,000

Club Officers and Staff

President
Jay Strickland 541 855 7161
strickdog@q.com

Vice President
Gary Neal 541-476-6159
cruisin60s@charter.net

Secretary (interim)
Alan Littlewood 541 362 3731
alan_littlewood@charter.net

Treasurer (interim)
Werner Bruckner 541 664 2549
wkbruck@charter.net

Board Members at Large
Gary Croucher 541 664 1133
No email

Larry Cogdell 541 840 1514
planner4u@aol.com

Paul Chapman 541 878 3890
chappk01@msn.com

Safety Coordinator
Werner Bruckner 541 664 2549
wkbruck@charter.net

Event Coordinator
Rick Lindsey 541 776-5832
ricklindsey@charter.net

Newsletter Editor
Ben Musolf 541 608 7240
flight431@msn.com

Public Relations
Calvin Emigh 541 951 5055
calvinemigh@charter.net

Field Maintenance
Sam Arrigo 541 597 4573
rcsam@oigp.net

Webmaster
Rick Lindsey 541 776 5832
ricklindsey@charter.net

Flight Instructors
Rick Lindsey 541 776 5832
ricklindsey@charter.net

Richard Schwegerl 541 773 5479
bbschweg@aol.com

Ben Musolf 541 608 7240
Flight431@msn.com

Our Thanks and Appreciation to the following businesses:

Al's Cycle and Hobby
Southern Oregon's Premiere Bicycle and Hobby Source
127 N. Central ave.
Medford, OR 97501-5925
541-779-9935
fax 541-772-0114
www.alscycleandhobby.com

Mild to Wild Hobby House LLC
Visit Our Website
mildtowildhh.com
Grants Pass RC Source
Hobby Supplies
DENNIS ROGERS, Owner
HOURS: Tuesday - Friday 9:00 - 6:00 • Saturday 10:00 - 5:00
309 N.W. E Street
Grants Pass, OR 97526
541-471-8780
rmildtowild@peoplepc.com

NOTICE:
Club Meeting Schedule

The General Meeting and Board Meeting are now held on the SECOND TUESDAY of the month.

Board Meeting: 5:30 pm

General Meeting: 7:00 pm

Meetings are still held at the Central Point Senior Citizens Center, 123 North Second Street.

See You There!

Rogue Eagles R/C Club
P.O. Box 8332
Medford, OR 97501

«FIRST» «LAST»
«STREET»
«CITY», «STATE» «ZIP»